Digital control module with two independent inputs to control (dimming/switching) two DALI groups with conventional momentary switches

DALI GC

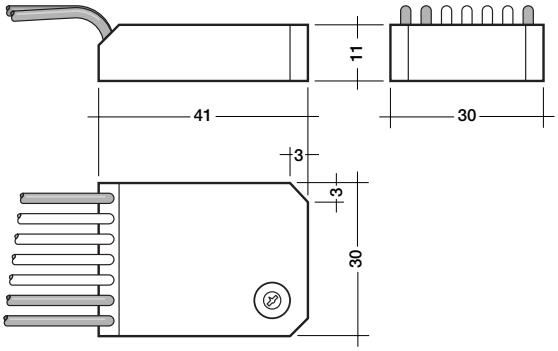

Functional description

- Ultra compact control module for dimming and switching of two DALI groups with conventional momentary switches.
- Assigning of momentary switches to specific groups is done by selecting the group range via a turn switch on the back of the module.
- Addressing of individual ballasts and assigning ballasts to DALI groups can be done from each DALI GC module by activating a simple “momentary switch” sequence.
- DALI GC modules allow multi master operation. Multiple control modules can be used on the same comfortDIM DALI network.

Installation

- The DALI GC is inserted into the mounting box for the momentary switch.
- The DALI GC must not be connected to the mains. It is supplied directly via the DALI signal line.
- The momentary switches are connected directly to the DALI GC (potential free contacts) and must not be connected to the mains.
- DALI signals are not SELV. Therefore the same procedures should be applied as working with mains voltage.

type		DALI GC
article number		24033450
supply	-	via DALI signal line
current	-	6 mA
input	2 momentary switches	single or twin
output	-	DALI
groups	-	2 from 16 / broadcast
temperature	permitted ambient temperature	0 °C – 50 °C

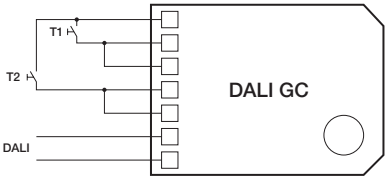

single momentary switch

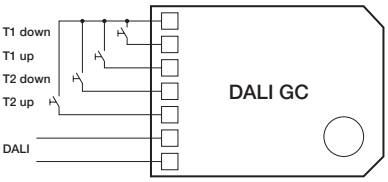

twin momentary switch

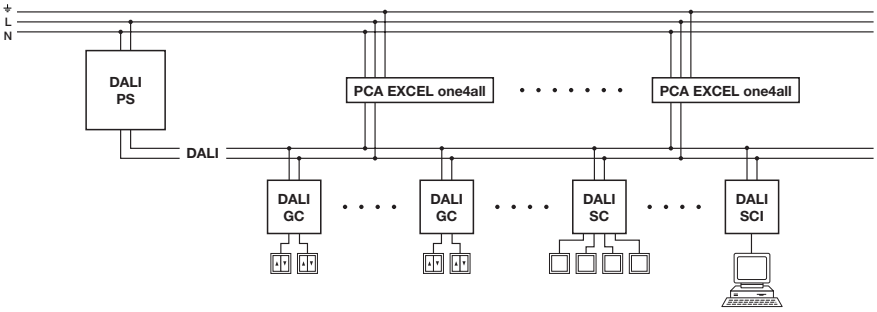

TRIDONIC.ATCO